Small Switching Valves
Button Type / Toggle Type

■Button Type





RoHS

MSHRP (M5 Connection Type)
MSHBP (Rc1/8 Connection Type)

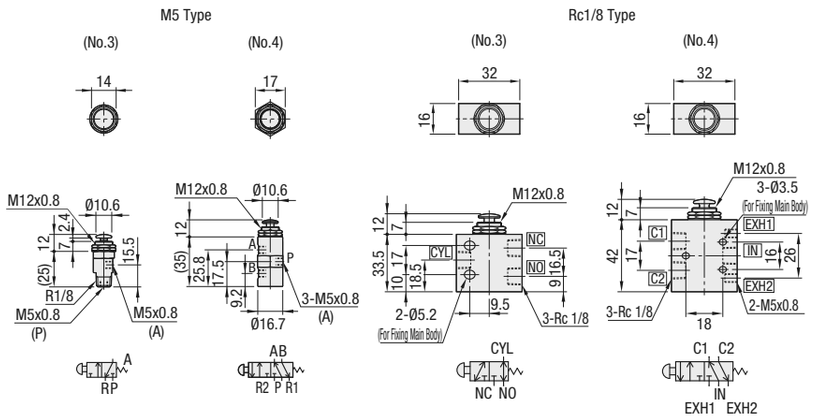

M Material: Body: Brass (Surface Treatment: Electroless Nickel Plating), Push Button: EN 1.4305 Equiv. Button position is non-retaining type (spring return).

Part Number Type	No.	Direction	Number of Ports	Pipe Connection Bore Dia. IN, OUT	Pipe Connection Bore Dia. EX	Number of Positions	Effective Sectional Area (mm²)	Mass (g)	Unit Price
MSHRP	3	3	3	M5	1.5	2	1.8	30	
	4	4	5				1.9	60	
MSHBP	3	3	3	Rc1/8	Rc1/8		4.5	130	
	4	4	5		M5		5.5	160	

■Toggle Type





RoHS

MSHRT (M5 Connection Type)
MSHBT (Rc1/8 Connection Type)

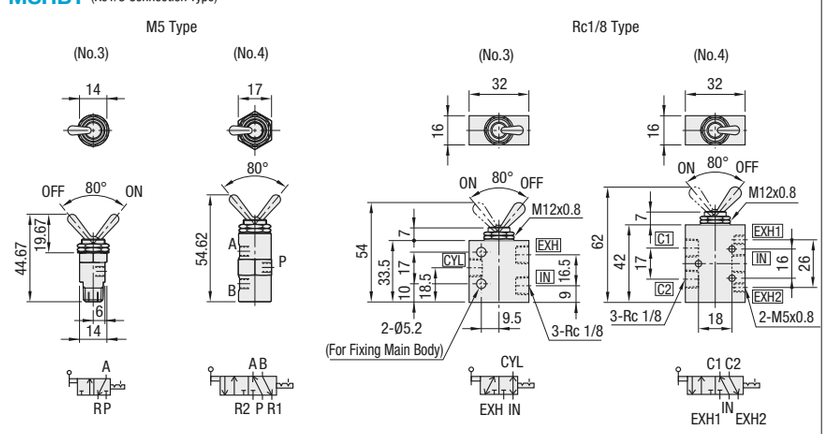

M Material: Body: Brass (Surface Treatment: Electroless Nickel Plating), Toggle: EN 1.0718 Equiv. Toggle position is retaining type.

Toggle Type body is same shape / dimension as Button Type. For detailed body dimensions, please see above Button Type (MSHRP, MSHBP) Drawings.

Part Number Type	No.	Direction	Number of Ports	Pipe Connection Bore Dia. IN, OUT	Pipe Connection Bore Dia. EX	Number of Positions	Effective Sectional Area (mm²)	Mass (g)	Unit Price
MSHRT	3	3	3	M5	1.5	2	1.8	30	
	4	4	5				1.9	60	
MSHBT	3	3	3	Rc1/8	Rc1/8		4.5	130	
	4	4	5		M5		5.5	160	

Ordering Example — Part Number: MSHRP3, MSHBP4

Example

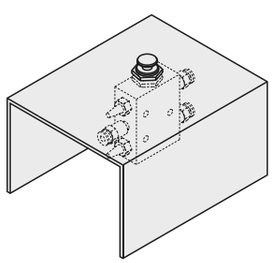

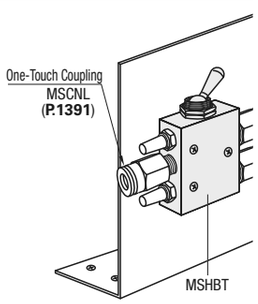

Specifications

Applicable Fluid	Air
Operating Pressure Range	0~0.9MPa
Operating Temp. Range	5 ~ 60°C (No Freezing)

Small Switching Valves
Actuator Set Type

■Actuator Set Type



RoHS

MSHRM (M5 Connection Type)
MSHBM (Rc1/8 Connection Type)

Valve

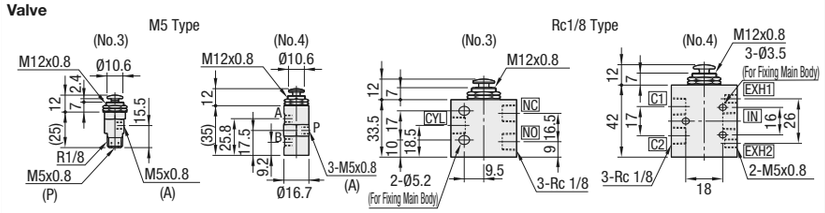

Actuator

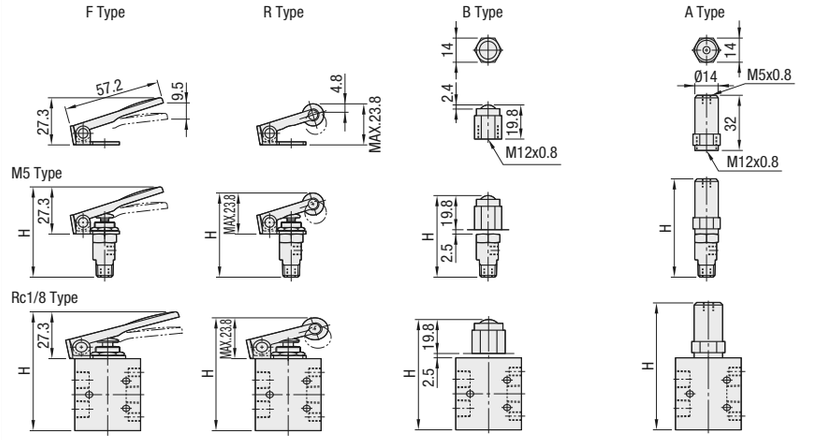

For Type B, set approx. 2.5mm clearance between an actuator and a valve.
M Material: Body: Brass (Surface Treatment: Electroless Nickel Plating), Push Button: EN 1.4305 Equiv.

Part Number Type	No.	Actuator	Direction	Number of Ports	Pipe Connection Bore Dia. IN, OUT	Pipe Connection Bore Dia. EX	Number of Positions	Effective Sectional Area (mm²)	H Type F	H Type R	H Type B	H Type A	Unit Price Type F	Unit Price Type R	Unit Price Type B	Unit Price Type A
MSHRM	3	F (Manual Operation Type)	3	3	M5	1.5	2	1.8	52.3	48.8	47.3	57				
	4	R (Roller Type)	4	5				1.9	62.2	58.7	57.2	67				
MSHBM	3	B (Ball Type)	3	3	Rc1/8			4.5	60.8	57.3	55.8	65.5				
	4	A (Air Pilot Type)	4	5		M5		5.5	69.3	65.8	64.3	74				

Ordering Example — Part Number: MSHRM4 - Actuator: F; MSHBM4: A

Applicable Fluid	Air
Operating Pressure Range	0~0.9MPa
Operating Temp. Range	5 ~ 60°C (No Freezing)

Example

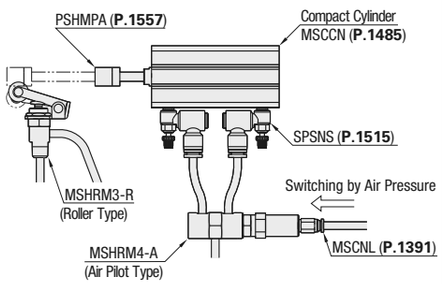

Various actuators can be mounted on these small user-friendly switching valves, which allows selection of various switching methods.

Actuator		F Type	R Type	B Type	A Type
Structure		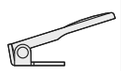			
Weight		20g	15g	15g	28g
Operating Force	MSHRM	3N	4N	10N	0.3MPa
	MSHBM	7N	11N	23N	0.3MPa
Features		Can be operated easily by finger force.	Switching is activated by detecting a force in on direction.	Switching is operated by detecting 360° moving of the ball.	Switching is operated by detecting the compressed air on the pilot.

The actuator and the valve will be shipped unassembled.

Manual Switching Valves

Lever Type / Miniature Lever Type

■Lever Type





RoHS

MHAN (No Lock Mechanism)

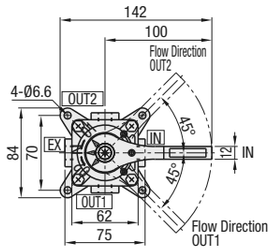

MHANR (with Lock Mechanism)

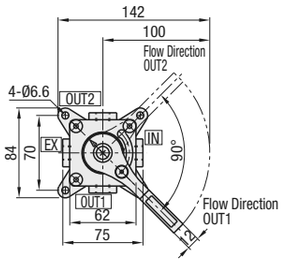

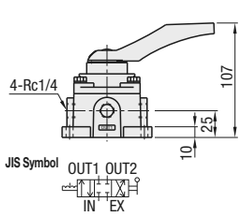

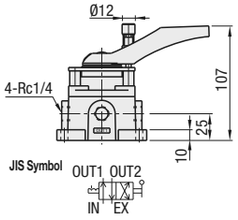

■Features

- MHAN : 3-position type of closed center.
- MHANR : 2 Position Type; Lever is locked at the OUT1 and OUT2 positions. Move the lever by pressing the knob for switching.

■Components

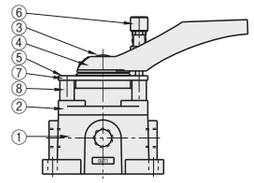

■Component List

Part Number	Name	Quantity	Material
①	Base	1	Aluminium Die Cast
②	Cover	1	Aluminium Die Cast
③	Small Flat Head Screw	1	EN 1.0038 Equiv.
④	Lever	1	Aluminium Die Cast
⑤ MHAN	Bolt	4	EN 1.0038 Equiv.
⑤ MHANR	Hex Socket Flat Head Cap Screw	4	EN 1.7220 Equiv.
⑥	Knob	1	EN 1.0038 Equiv.
⑦ MHANR Only	Stopper Plate	1	EN 1.0330 Equiv.
⑧	Collar	4	EN CW614N Equiv.

Part Number Type	No.	Direction	Number of Ports	Pipe Connection Bore Dia. IN, OUT	EX	Number of Positions MHAN	MHANR	Effective Sectional Area (mm²)	Operating Pressure (MPa)	Operating Temp. Range (°C)	Applicable Fluid	Mass (g) MHAN	MHANR	Unit Price MHAN	MHANR
MHAN MHANR	4	4	4	Rc1/4	Rc1/4	3	2	20	0~0.7	5~60	Air	800	850		

■Miniature Lever Type



RoHS

MHAM

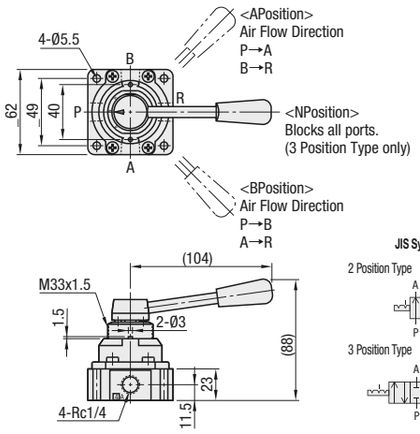

■Features

- Lever Type Switching Valves more space-saving than MHAN.
- 3 Position Type has N position, which blocks all ports and can be used for stopping cylinder (Cannot abruptly stop cylinder due to its residual pressure.).

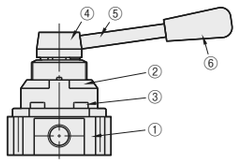

■Component List

Part Number	Name	Material
①	Main Body	Aluminium Die Cast
②	Cover	Aluminium Die Cast
③	Machine Screw	EN 1.0038 Equiv.
④	Handle	Zinc Die Cast
⑤	Lever	JIS-SGD400
⑥	Lever Knob	POM

Part Number Type	No.	P Number of Positions	Direction	Number of Ports	Pipe Connection Bore Dia. IN, OUT	EX	Effective Sectional Area (mm²)	Operating Pressure (MPa)	Operating Temp. Range (°C)	Applicable Fluid	Mass (g)	Unit Price
MHAM	4	2 3	4	4	Rc1/4	Rc1/4	7.5	0~1.0MPa	5~60	Air	280	

Ordering Example: Part Number MHAN4 / MHAM4 - Number of Positions 3

Manually Operated Valves / Silencers

Grip Type

■Grip Type



RoHS

MSHBA1 MSHBG1

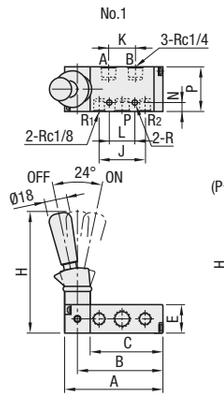

MSHBA3 MSHBG3

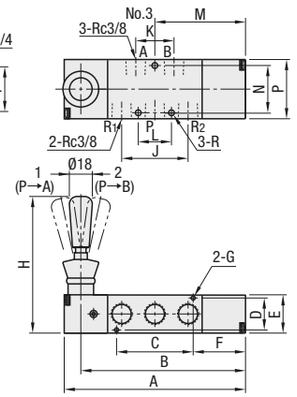

■Specifications

Applicable Fluid	Air
Operating Temp. Range	5 ~ 60°C
Operating Pressure Range	0~0.9MPa

■Components

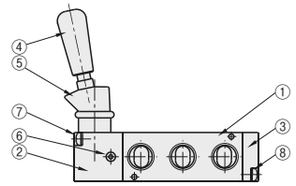

■Component List

Part Number	Name	Quantity	Material
①	Main Body	1	EN AW-6061 Equiv.
②	Pilot Body	1	EN AW-6061 Equiv.
③	End Cover	1	(No.1)POM (No.3)EN AW-6061 Equiv.
④	Hand Lever	1	POM
⑤	Dust Cover	1	NBR
⑥	Set Screw	2	Carbon Steel
⑦	Screw for Pilot Body	2	Carbon Steel
⑧	End Cover Screw	2	Carbon Steel

Part Number Type	No.	Direction	Number of Ports	Number of Positions	Pipe Connection Bore Dia. IN, OUT	EX	Effective Sectional Area (mm²)	A	B	C	D	E	F	G	H	J	K	L	M	N	P	R	Mass (g)	Unit Price
MSHBA	1	4	5	2	Rc1/4	Rc1/8	18	77	67	57	-	22.3	-	-	95	36	21	20	-	7	35	4.2	200	
	3				Rc3/8	Rc3/8	34	114	101.5	60	25	30	17	3.2	107	52	30	26	47	37	46.4	4.5	440	
MSHBG	1			3	Rc1/4	Rc1/8	16	97	86.5	71	-	22.3	-	-	95	36	21	20	-	7	35	4.2	240	
	3				Rc3/8	Rc3/8	34	142	129	60	25	30	41	3.2	107	52	30	26	71	37	46.4	4.5	490	

Ordering Example: Part Number MSHBA1 / MSHBG3

■Features:

Ensured switching with a lever irrespective of pressure.

MSHBA: Lever position is held at switching point. Air is sure to flow into either A or B port.

MSHBG: Lever returns to the middle position (blocking air) when released. (Cannot abruptly stop cylinder due to its residual pressure.)

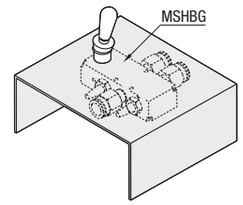

■JIS Symbol

2 Position Type	3 Position Type
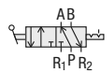	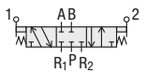

■Air Flow

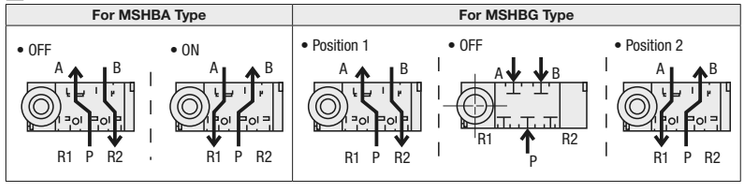

■Silencers



RoHS

MSSL (Metal)

JIS Symbol 

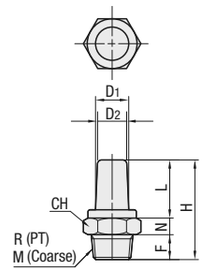

Material: Brass

MSSJ (Resin)

JIS Symbol 

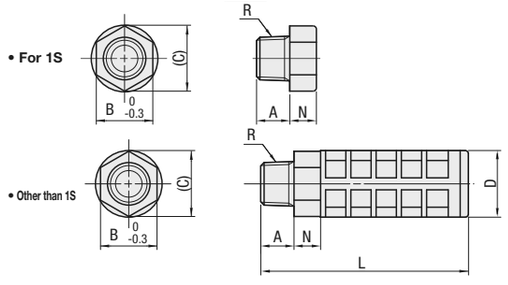

Material: ABS Resin

■Metal Silencers

Part Number Type	No.	R (PT) M (Coarse)	D1	D2	N	F	L	H	CH (Wrench Flats)	Effective Sectional Area (mm²)	Unit Price
MSSL	1	R1/8	8	7	4	6	14	24	12	20	
	2	R1/4	12	10	4	8	18	30	16	45	
	3	R3/8	14	11	5	9	21	35	18	86	
	5	M5	5	4	3	5	12	20	8	2	

■Resin Silencers

Part Number Type	No.	R	A	B	(C)	D	L	N	Effective Sectional Area (mm²)	Unit Price
MSSJ	1	R1/8	7	14	16.3	16.1	33	7	12	
	1S	R1/8	10	10	11.5	-	-	6	12	
	2	R1/4	10	17	19.6	20.1	62.5	8	40	
	2S	R1/4	10	14	16.2	16	36	7	20	
	3	R3/8	12	24	26	26.3	68	11	63	

Ordering Example: Part Number MSSJ2