AC

MIXED threaded valves G1/8 - G 1/4 - G1/2

- Mixed commutation system (spool - poppet)
- High flow rate
- Quick response time
- High cycles
- Control: manual, mechanical, pneumatic, electric
- Modular sub-bases



TECHNICAL CHARACTERISTICS

Ambient temperature	-10 ÷ +45 °C		
Fluid temperature	max +50 °C		
Fluid	filtered air 50 µm, lubricated or not		
Commutation system	poppet mixed system		
Ways/Positions	**5/2**		
Pressure	10 bar max		
Control	pneumatic, electric, mechanical		
Return	pneumomechanical spring, pneumatic, electric		
Connections	**G1/8**	**G1/4**	**G1/2**
Nominal Ø (mm)	6	8	15
Nominal flow rate (Nl/min)	1080	1600	4600

CONSTRUCTIVE CHARACTERISTICS

Valve body	**G1/8 - G1/4** = zamak
	G1/2 = die-cast aluminium
Seals	nitrile rubber, polyurethane
Actuators	technopolymer
Spool	aluminium

ELECTRIC CHARACTERISTICS

	G1/8 G1/4	**G1/2**
Electropilot	U1	U2
Coil	DA	DB
Power consumption	3,5 W (DC) - 5 VA (AC)	11 W (DC) - 10 VA (AC)
Connector	AM-5110	AM-5111
Voltage	12 V DC - 24 V DC - 24 V AC - 110 V AC - 230 V AC	
Manual override	with 2 position screw	

Flow rate characteristics

>> G1/8

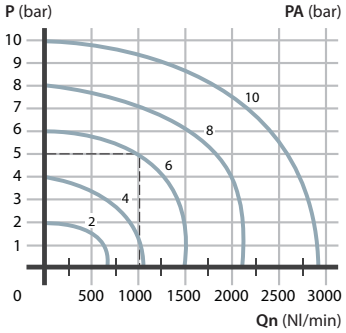

>> G1/4

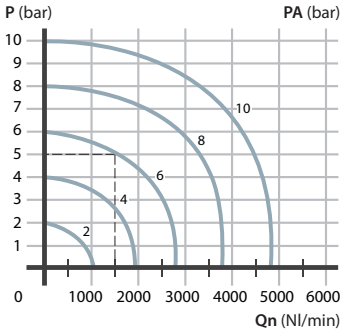

>> G1/2

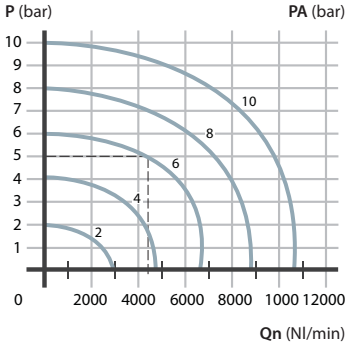

P = Working pressure
PA = Supply pressure
Qn = Flow rate

Indirect mechanical control for use with pneumatic, mechanical and manual actuators



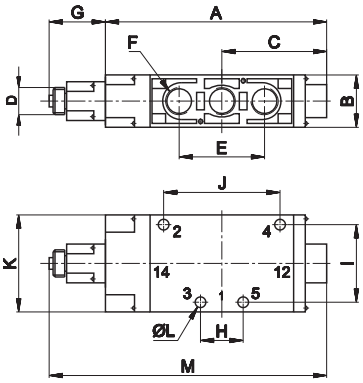

	G1/8	G1/4	G1/2
A	99	114	163
B	25	27	40
C	47	54	83
D	M14x1	M14x1	M14x1
E	36	44	80
F	G1/8	G1/4	G1/2
G	27	27	27
H	18	22	40
I	26	40	50
J	36	60	108
K	40	50	63
L	4,5	5,5	6,5
M	126	141	190

1 = Supply port
2 - 4 = Use
3 - 5 = Exhaust
14 = Control
12 = Return

Symbol	Connection	Control	Return	Pressure bar	Weight Kg	Part no.
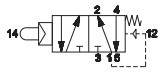	G1/8	ball pushrod	pneumomechanical spring	1,8÷10	0,27	**AC-7010**
	G1/4			2,3÷10	0,28	**AC-8010**
	G1/2			2÷10	0,33	**AC-9010**

5/2

MANUAL ACTUATORS

	Recessed button	■BLACK ■RED ■GREEN	AI-3511 AI-3512 AI-3513
	Head button	■RED ■BLACK ■RED ■BLACK	AI-3514 AI-3516 AI-3514D AI-3516D
	Button	■GREEN ■RED ■BLACK	AI-3515 AI-3517 AI-3519
	Rotating selector	■BLACK ■BLACK	AI-3520 AI-3521
	Rotating lever selector	■BLACK ■BLACK	AI-3522 AI-3523
	Lever operator	■BLACK	AI-3524
	Omni-directional operator	■BLACK	AI-3525
	Push-pull operator	■BLACK	AI-3526

PNEUMATIC AND MECHANICAL ACTUATORS

	Pneumatic actuator	AI-3550
	Amplified pneumatic actuator	AI-3551
	Roller operator 1 position	AI-3560
	Ball-push operator 1 position	AI-3562
	Operator with omni-directional antenna 1 position	AI-3563
	Roller lever operator 1 position	AI-3570
	Articulated roller lever opeartor 1 position Complete actuation with stroke 2,5 mm, max stroke 4,7 mm	AI-3571
	Key operator 1 position	AI-3572

For actuator dimensions refer to section **"Accessories>Actuators and buttons"**

Indirect control
for panel mounting actuators Ø 22



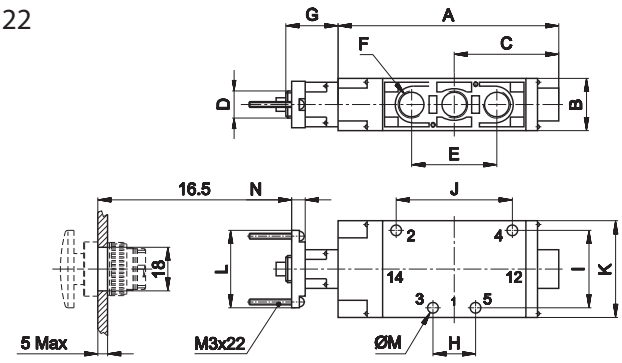

	G1/8	G1/4	G1/2
A	99	114	163
B	25	27	40
C	47	54	83
D	M14x1	M14x1	M14x1
E	36	44	80
F	G1/8	G1/4	G1/2
G	27	27	27
H	18	22	40
I	26	40	50
J	36	60	108
K	40	50	63
L	40	40	40
M	4,5	5,5	6,5
N	7	7	7

1 = Supply port
2 - 4 = Use
3 - 5 = Exhaust

14 = Control
12 = Return

	Symbol	Connection	Control	Return	Pressure	Weight	Part no.
					bar	Kg	
5/2	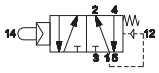	G1/8	ball pushrod	pneumomechanical spring	1,8÷10	0,28	**AC-7013**
		G1/4			2,3÷10	0,29	**AC-8013**
		G1/2			2÷10	0,84	**AC-9013**
5/2	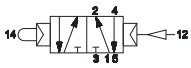	G1/8	ball pushrod	pneumatic amplified	1÷10	0,29	**AC-7013P**
		G1/4			1÷10	0,28	**AC-8013P**
		G1/2			1÷10	0,83	**AC-9013P**

MANUAL ACTUATORS

	Recessed button	■BLACK ■RED ■GREEN	AI-3511 AI-3512 AI-3513
	Head button	■RED ■BLACK ■RED ■BLACK	AI-3514 AI-3516 AI-3514D AI-3516D
	Button	■GREEN ■RED ■BLACK	AI-3515 AI-3517 AI-3519
	Rotating selector	■BLACK ■BLACK	AI-3520 AI-3521
	Rotating lever selector	■BLACK ■BLACK	AI-3522 AI-3523
	Lever operator	■BLACK	AI-3524
	Omni-directional operator	■BLACK	AI-3525
	Push-pull operator	■BLACK	AI-3526

For actuator dimensions refer to section **"Accessories>Actuators and buttons"**

Single/double **pneumatic** impulse





	Symbol	Connection	Control	Return	Pressure bar	Times (ms) En.	Times (ms) De-en.	Weight Kg	Part no.
	SINGLE PNEUMATIC IMPULSE								
5/2	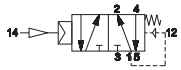	G1/8	pneumatic amplified	pneumomechanical	1,8÷10	8	10	0,22	**AC-7100**
		G1/4			2,3÷10	10	10	0,23	**AC-8100**
		G1/2			2÷10	10	10	0,76	**AC-9100**
	DOUBLE PNEUMATIC IMPULSE								
5/2	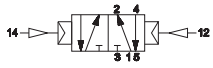	G1/8	pneumatic amplified	pneumatic amplified	1÷10	5	10	0,23	**AC-7120**
		G1/4			0,8÷10	6	6	0,21	**AC-8120**
		G1/2			0,8÷10	8	8	0,77	**AC-9120**

Single pneumatic impulse

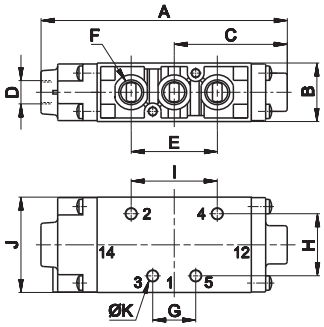

1 = Supply port
2 - 4 = Use
3 - 5 = Exhaust
14 = Control
12 = Return

	A	B	C	D	E	F	G	H	I	J	K
G1/8	103	25	47	G1/8	36	G1/8	18	26	36	40	4,5
G1/4	117	27	54	G1/8	44	G1/4	22	40	60	50	5,5
G1/2	165	40	82,5	G1/8	80	G1/2	40	50	108	63	6,5

Double pneumatic impulse

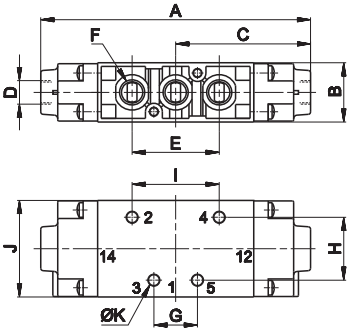

1 = Supply port
2 - 4 = Use
3 - 5 = Exhaust
14 = Control
12 = Return

	A	B	C	D	E	F	G	H	I	J	K
G1/8	112	25	56	G1/8	36	G1/8	18	26	36	40	4,5
G1/4	126,5	25	63	G1/8	44	G1/4	22	40	60	50	5,5
G1/2	165	40	82,5	G1/8	80	G1/2	40	50	108	63	6,5

Single/double **electric** impulse





	Symbol	Connection	Control	Return	Pressure bar	Times (ms) En.	Times (ms) De-en.	Weight Kg	Part no.
	SINGLE ELECTRIC IMPULSE								
5/2	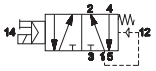	G1/8	electric amplified	pneumomechanical	1,8÷10	18	20	0,27	**AC-7500**
		G1/4			2,3÷10	22	22	0,28	**AC-8500**
		G1/2			2÷10	23	30	1,1	**AC-9500**
	DOUBLE ELECTRIC IMPULSE								
5/2	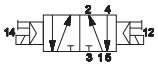	G1/8	electric amplified	electric amplified	1÷10	14	14	0,33	**AC-7520**
		G1/4			0,8÷10	14	14	0,31	**AC-8520**
		G1/2			0,8÷10	16	16	1,1	**AC-9520**

Single electric impulse

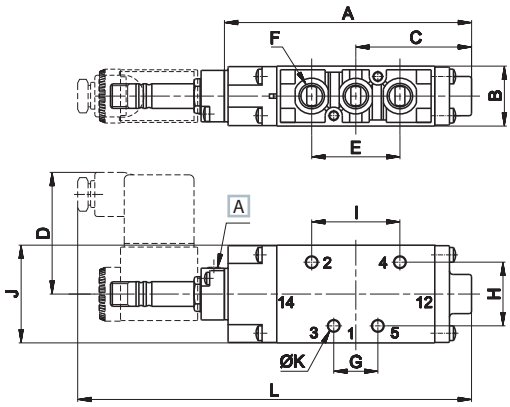

A Manual override

1 = Supply port
2 - 4 = Use
3 - 5 = Exhaust
14 = Control
12 = Return

	A	B	C	D	E	F	G	H	I	J	K	L
G1/8	101	25	47	50	36	G1/8	18	26	36	40	4,5	164
G1/4	116	27	54	50	44	G1/4	22	40	60	50	5,5	180
G1/2	165	40	83	48	80	G1/2	40	50	108	63	6,5	241

Double electric impulse

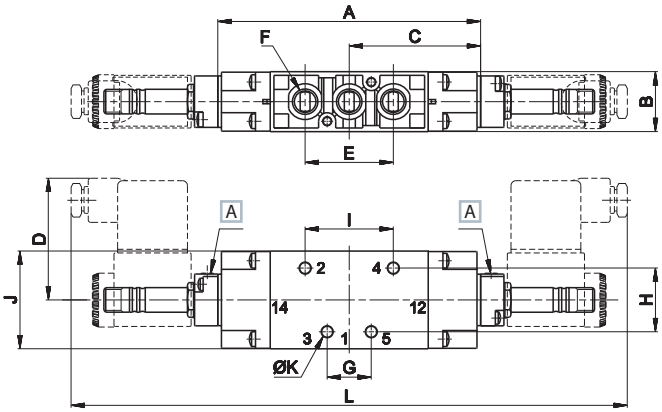

A Manual override

1 = Supply port
2 - 4 = Use
3 - 5 = Exhaust
14 = Control
12 = Return

	A	B	C	D	E	F	G	H	I	J	K	L
G1/8	107	25	53,5	50	36	G1/8	18	26	36	40	4,5	227
G1/4	124	27	62	50	44	G1/4	22	40	60	50	5,5	252
G1/2	164	40	80,5	48	80	G1/2	40	50	108	63	6,5	317

For technical data of coils, refer to section **"Accessories>Coils"**
For external servoassisted pilot, use AM - 5148 plates (refer to next pages)
Electrovalves are supplied without coil, connector and locking ring

Modular sub-base **G1/8**



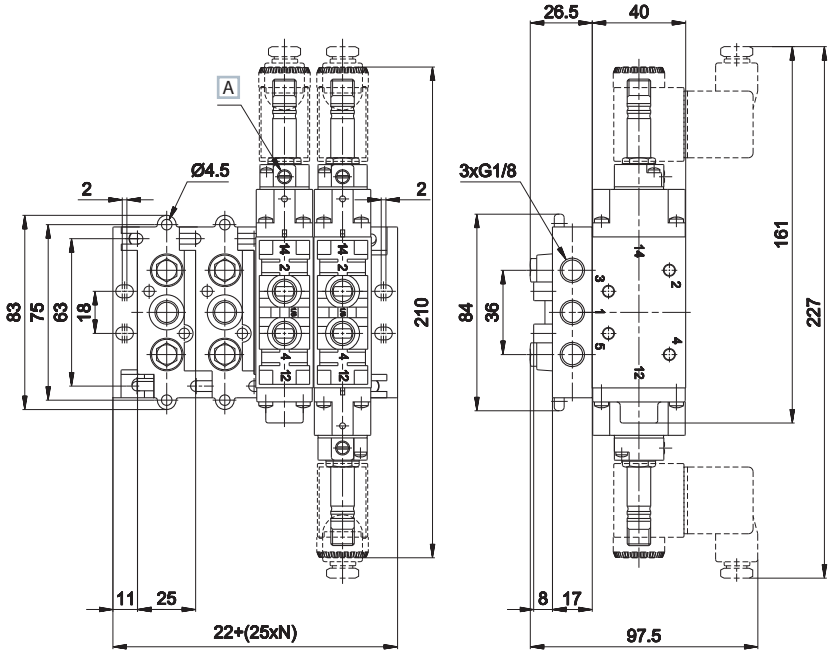

A Manual override

1 = Supply port
2 - 4 = Use
3 - 5 = Exhaust
14 = Control
12 = Return

AC-7900	AC-7905
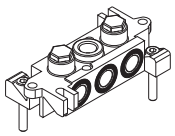	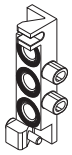
Sub-base with connections **G1/8** weight: 0,15 Kg	Inlet plate **MIXED system 5/2 - G1/8** weight: 0,06 Kg

Modular sub-base **G1/4**



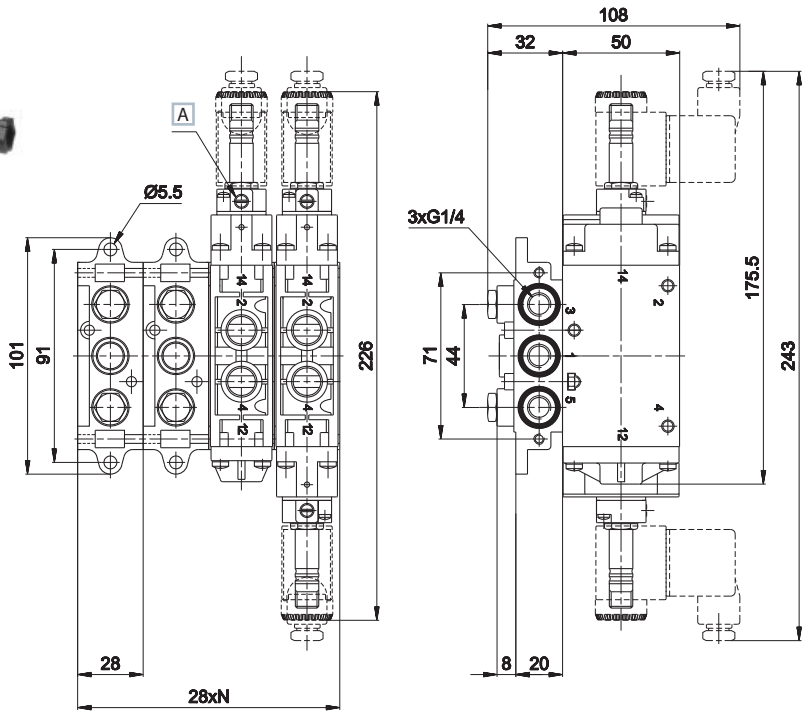

A Manual override

1 = Supply port
2 - 4 = Use
3 - 5 = Exhaust
14 = Control
12 = Return

AC-8900

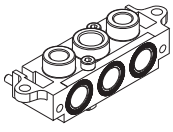

Sub-base with threaded connections **G1/4**
Screws are supplied separately
weight: 0,22 Kg