KL Ø 32 ÷ 125 mm

- New design of the profile for easier cleaning
- Grooves for recessed sensors and connections on one side for easy installation
- Traditional UNIVER technology to ensure strength and reliability
- Dimensions complying with international standards for a full interchangeability



TECHNICAL CHARACTERISTICS

Ambient temperature	-20 ÷ 80 °C
Fluid	filtered air with or without lubrication
Working pressure	1,5 ÷10 bar
Bores	Ø 32 - 40 - 50 - 63 - 80 - 100 - 125 mm
Cushionings	pneumatic and adjustable on both sides

CONSTRUCTIVE CHARACTERISTICS

End caps	die-cast in aluminium alloy
Barrel	profiled and anodized aluminium
Piston	die-cast in aluminium alloy
Guide slide	acetalic resin
Piston Rod	chromium-plated steel standard, stainless steel upon request
Piston Seal	lip seal in nitrilic resin
Guide bush for rod	UNIVER Original self-lubricating and self-aligning
Cushion seals	nitrilic rubber
Magnet	standard supplied

CODIFICATION KEY

K	L	2	0	0	0	3	2	0	0	5	0		M
1		2	3		4			5				6	7

1 Series

KL = Pneumatic cylinders ISO 15552 Ø 32 ÷ 125 mm **Standard Magnetic**

2 Type

1 = Stainless steel rod
2 = Chromium-plated steel rod

3 Version

00 = **D.A.** Standard
01 = **D.A.** Through rod
40 = **D.A.** Reinforced bushing
60 = **S.A.** Retracted rod Max stroke 50 mm
70 = **S.A.** Extended rod Max stroke 50 mm
90 = **D.A.** High temperature seals +120 °C

4 Bore

032 = Ø32
040 = Ø40
050 = Ø50
063 = Ø63
080 = Ø80
100 = Ø100
125 = Ø125

5 Stroke (mm)

0025 - 0050 - 0075 - 0080 - 0100 - 0125 - 0150 - 0160
0175 - 0200 - 0250 - 0300 - 0320 - 0350 - 0400 - 0450
0500 - 0600 - 0700 - 0800 - 0900 - 1000

6 Option

F = Preset for locking unit - reduced protrusion
G = Preset for locking unit - ISO protrusion
K = Metallic rod scraper

7 Magnetic

M = Magnetic version (standard supplied)

D.A. = Double-acting **S.A.** = Single-acting

Further available versions

Cylinder with L1-N locking unit

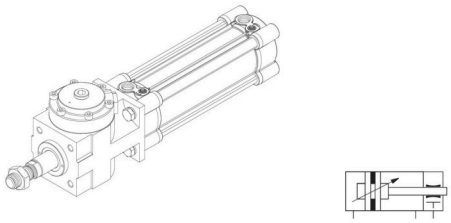

Tandem cylinder
Two-position tandem cylinder

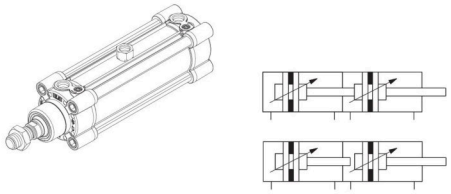

Opposed cylinders

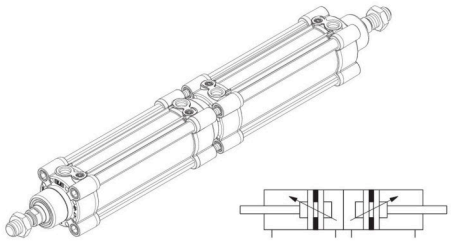

Cylinders with common piston rod

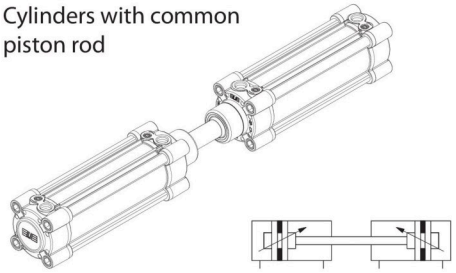

Standard version

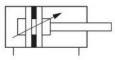

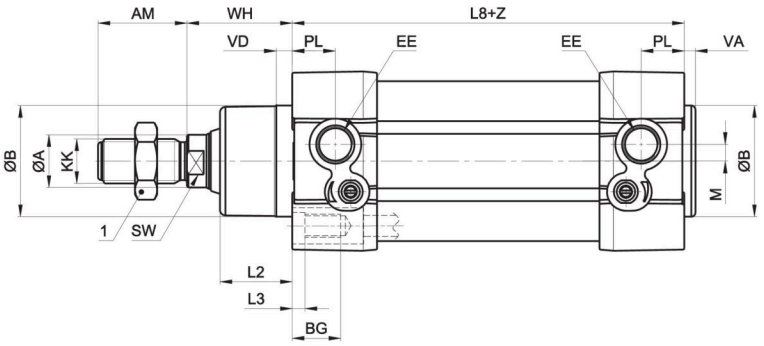

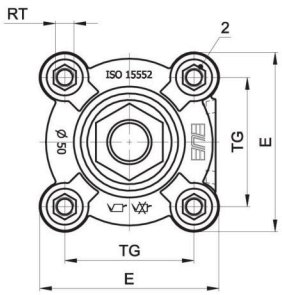

Through rod version

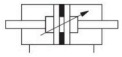

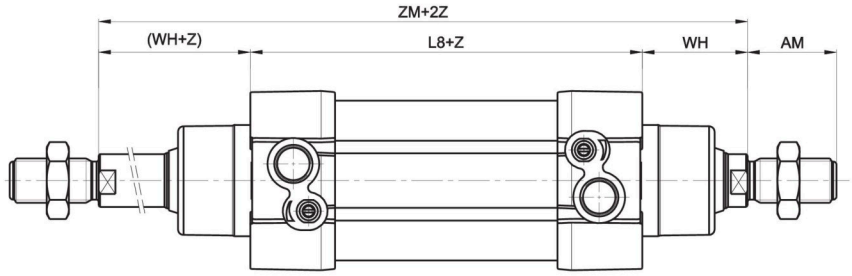

Z= stroke

Overall Dimensions

Ø	ØA	AM	ØB	BG	E+0,5	KK	L2	L3	L8		PL	RT	SW	TG		VA	VD	WH	EE	M	1	2	ZM	
									nom.	tol.				nom.	tol.								nom.	tol.
32	12	22	30	16	46,5	M10x1,25	16	5	94	±0,4	14	M6	10	32,5	±0,5	3,5	5	26	G1/8	4,4	17	6	146	+3,0 -1,5
40	16	24	35	16	52	M12x1,25	20	5	105	±0,7	16	M6	13	38	±0,5	4	5,5	30	G1/4	5	19	6	165	+3,0 -1,5
50	20	32	40	17	64,5	M16x1,5	26	6	106	±0,7	15,5	M8	17	46,5	±0,6	4	6	37	G1/4	6	24	8	180	+3,0 -1,5
63	20	32	45	18	76,5	M16x1,5	26	6	121	±0,8	17,5	M8	17	56,5	±0,7	4	6	37	G3/8	8	24	8	195	+3,0 -1,5
80	25	40	45	20	95	M20x1,5	32	7	128	±0,8	20	M10	22	72	±0,7	4	8	46	G3/8	7,5	30	10	220	+3,0 -1,5
100	25	40	55	20	114	M20x1,5	35	7	138	±1	20,5	M10	22	89	±0,7	4	8	51	G1/2	9	30	10	240	+3,5 -2,0
125	32	54	60	24	140	M27x2	45	8	160	±1	20,5	M12	27	110	±1,1	5,5	10	65	G1/2	11	41	12	290	+3,5 -2,0

Mass

Ø	Cylinder - stroke 0	Increase per mm stroke	Moving element - stroke 0	Moving element	Thrust (N)	Traction (N)
	Kg	gr	Kg	increase gr/mm	6 bar	6 bar
32	0,48	2,05	0,13	0,9	482	414
40	0,71	3,06	0,25	1,6	754	633
50	1,18	4,28	0,44	2,5	1178	990
63	1,74	4,91	0,55	2,5	1869	1680
80	2,74	7,20	0,97	3,8	3014	2722
100	3,92	8,00	1,19	3,8	4710	4416
125	6,83	12,40	2,20	6,2	7359	6882

Through rod cylinder mass

Ø	Cylinder - stroke 0	Increase per mm stroke	Moving element - stroke 0	Moving element
	Kg	gr	Kg	increase gr/mm
32	0,55	2,92	0,19	1,8
40	0,85	4,62	0,36	3,2
50	1,44	6,72	0,64	4,9
63	2,01	7,36	0,74	4,9
80	3,19	11,0	1,35	7,6
100	4,46	11,8	1,57	7,6
125	7,81	18,53	3,05	12,4

Nominal stroke tolerance

Cushion

Ø	Strokes up to 500	Strokes from 501 to 1000	Length	Kinetic energy absorption
	mm	mm	mm	Nm
32	+2 - 0	+3,2 - 0	18	1,8
40	+2 - 0	+3,2 - 0	24	2,5
50	+2 - 0	+3,2 - 0	24	4,5
63	+2,5 - 0	+4 - 0	30	8
80	+2,5 - 0	+4 - 0	30	12
100	+2,5 - 0	+4 - 0	35	21
125	+4 - 0	+5 - 0	35	36

Fixing elements and accessories

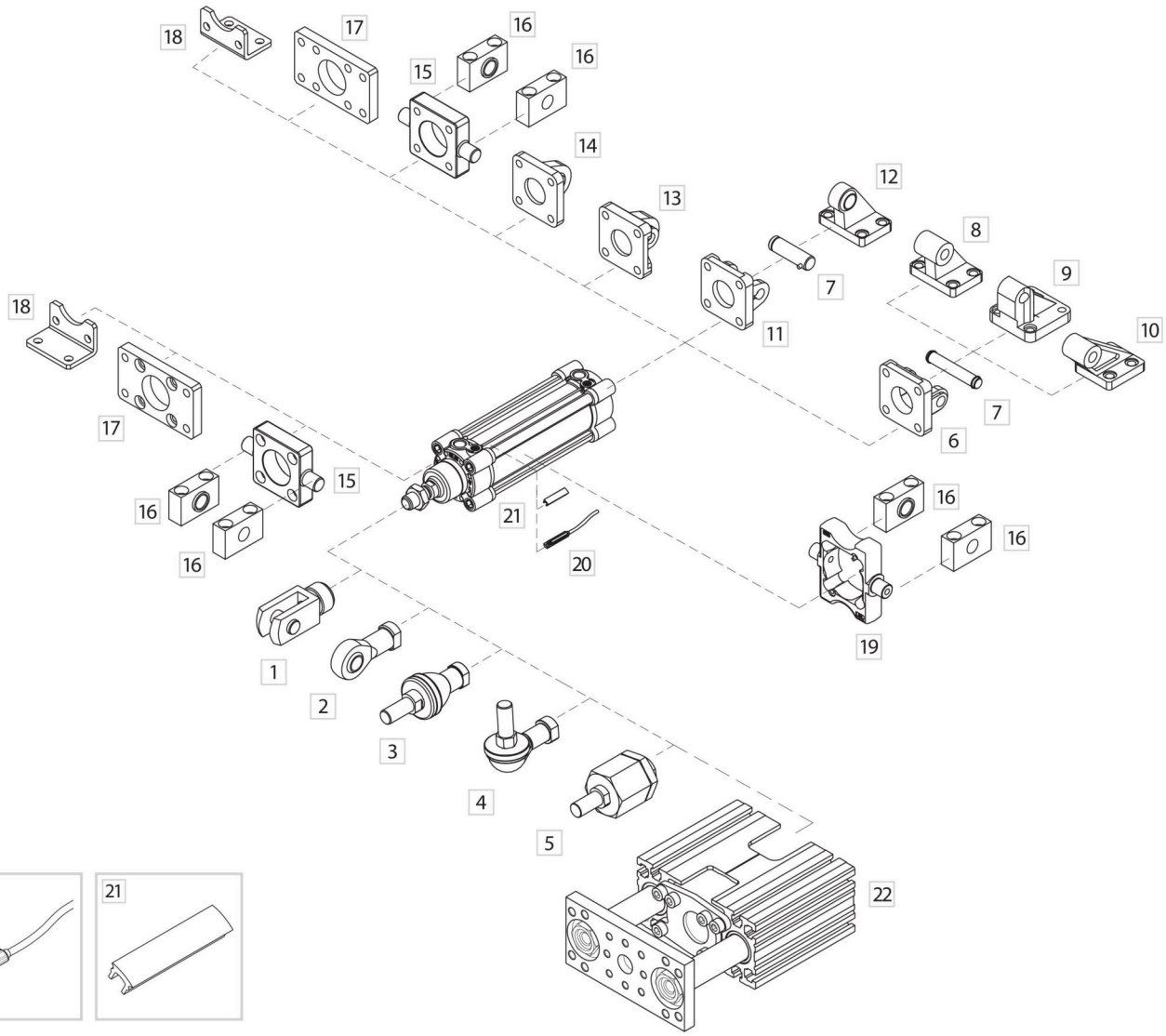

	DESCRIPTION	NOTE	PART NO.
1	Female fork with clips	Zinc-plated steel	**KF-15 _ _ _**
2	Articulated self-lubricating fork	Zinc-plated steel	**KF-17 _ _ _**
3	Fork with axially mounted articulated pin	Zinc-plated steel	**KF-22 _ _ _**
4	Fork with angle-mounted articulated pin	Zinc-plated steel	**KF-23 _ _ _**
5	Floating joint	Aluminium (steel upon request)	**KF-24 _ _ _**
6	Female hinge	Aluminium	**KF-10 _ _ _ A**
7	Pin	Aluminium (steel upon request)	**KF-18 _ _ _**
8	90° counter-hinge (CETOP)	Aluminium	**KF-19 _ _ _ CTA**
9	90° counter-hinge	Aluminium	**KF-19 _ _ _**
10	90° counter-hinge (CNOMO)	Aluminium	**KF-19 _ _ _ CN**
11	Narrow female hinge with pin	Aluminium (steel upon request)	**KF-10 _ _ _ AS**
12	Articulated counter-hinge	Steel	**KF-19 _ _ _ SC**
13	Articulated male rear hinge	Aluminium (steel upon request)	**KF-11 _ _ _ S**
14	Male rear hinge	Zinc-plated steel	**KF-11 _ _ _**
15	Front/rear hinge with floating pin	Zinc-plated steel	**KF-14 _ _ _ AP**
16	Support for hinges	Zinc-plated steel	**KF-41 _ _ _**
17	Front flange (MF1) - rear flange (MF2)	Zinc-plated steel	**KF-12 _ _ _**
18	Angle bracket (MS1)	Zinc-plated steel	**KF-13 _ _ _**
19	Intermediate hinge	Zinc-plated steel	**KLF-14 _ _ _**
20	Magnetic sensor DF series	-	**DF- _ _ _**
21	Strip for covering DF sensor wires	Nitrilic rubber	**DHF-0020100**
22	Slide unit	-	**J12**