LCA40

Pneumatic retractable locating pin unit,
double rod



L	C	A	4	0	0	4	0	E	A	R
1		2	3		4			5	6	7

1 Series

LC = Retractable locating pin unit

2 Version

A = Pneumatic, double rod

3 Size

40 = Ø 40 mm

4 Strokes

020 = 20 mm
040 = 40 mm

5 Sensor

N = No sensor (with protection plate)
E = Electronic sensor with M12 swivel connector

6 Rod end style

A = Rod for off-set pins
N = Rod for off-set pins with inverted holes (2 dowels - 1 screw)

7 Rod scraper

R = Metallic rod scraper

UNIVERSAL Pneumatic retractable locating pin unit with double rod

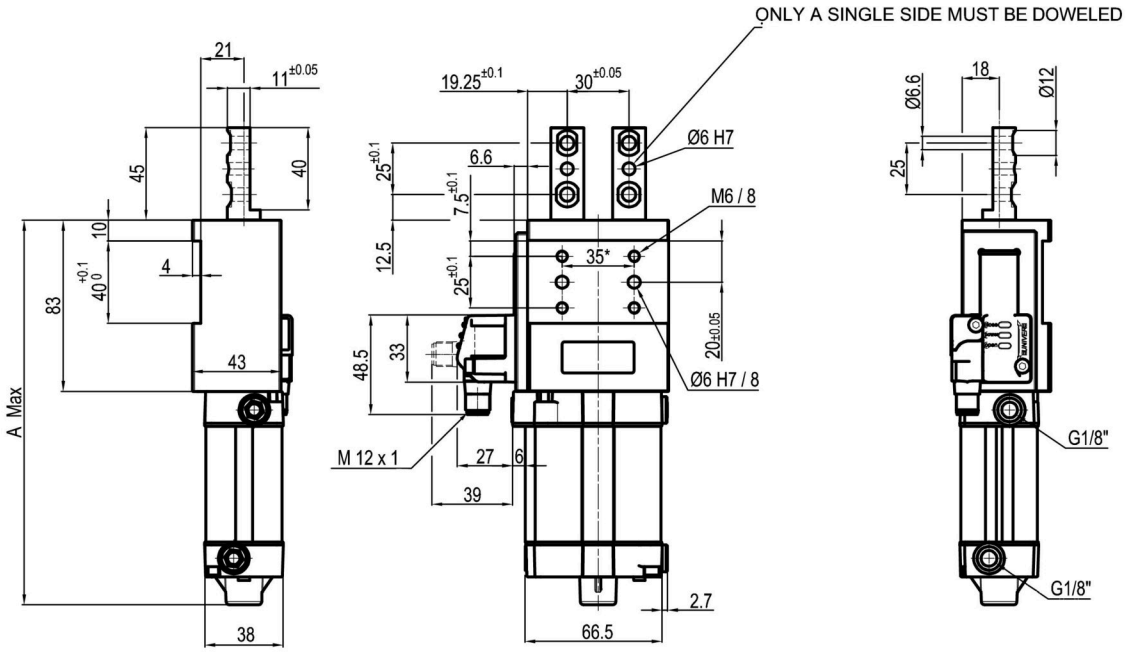

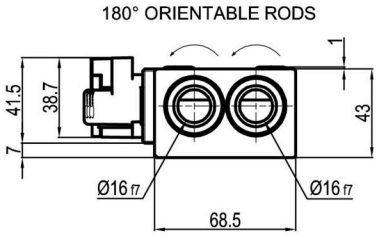

Stroke	A
20 mm	166,5 mm
40 mm	186,5 mm

Bore Ø	Max. pull force 0.5 MPa	Max. push force 0.5 MPa	Max. torque	Max. deflection moment	Weight
40 mm	550 N	600 N	3 Nm ±0.1°	6 Nm ±0.03°	1.8 Kg

Min./max. operating pressure: **0,4 / 0,6 MPa**
Operating temperature: **5° ÷ 45° C**
Strokes in mm.: **20 - 40**

Electronic sensor with M12 swivel connector that can be orientated at 0° or 90°
Supply voltage: 10÷30 Vdc

IP code: **IP 65**
Pneumatic ports on both sides

* : TOLERANCE BETWEEN DOWEL HOLES ± 0.02, TO SCREW HOLES ± 0.1

Subject to technical modification without notice.

UNIVERSAL Pneumatic retractable locating pin unit with double rod

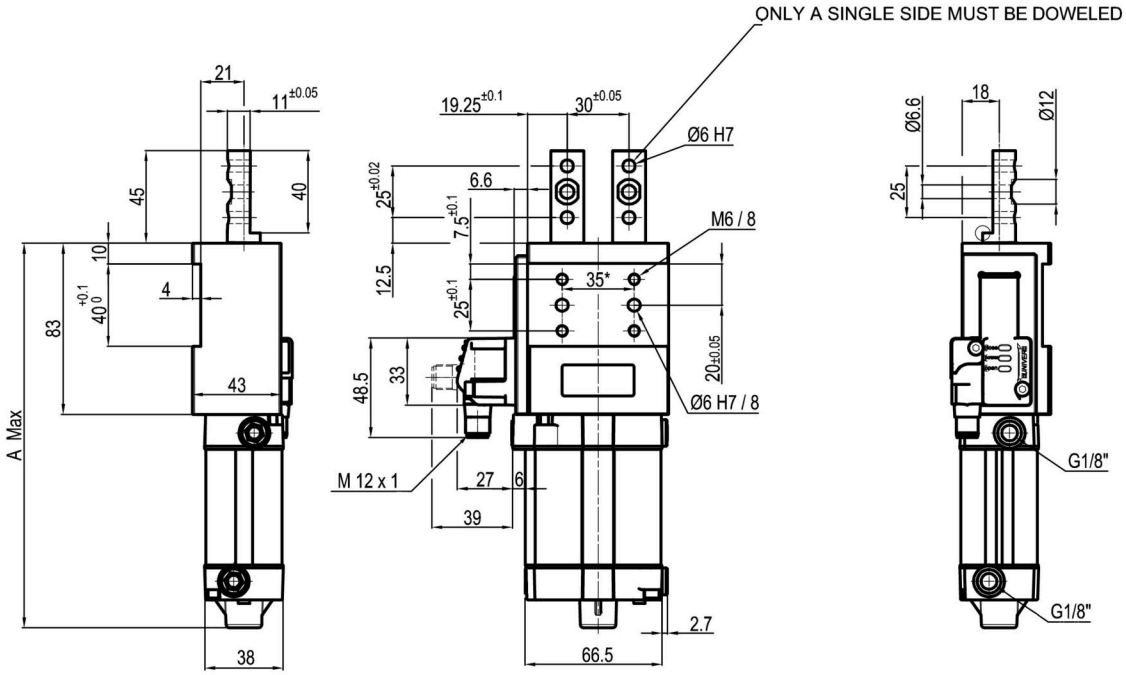

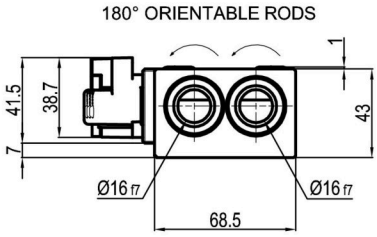

Stroke	A
20 mm	166,5 mm
40 mm	186,5 mm

Bore Ø	Max. pull force 0.5 MPa	Max. push force 0.5 MPa	Max. torque	Max. deflection moment	Weight
40 mm	550 N	600 N	3 Nm ±0.1°	6 Nm ±0.03°	1.8 Kg

Min./max. operating pressure: **0,4 / 0,6 MPa**
Operating temperature: **5° ÷ 45° C**
Strokes in mm.: **20 - 40**

Electronic sensor with M12 swivel connector that can be orientated at 0° or 90°
Supply voltage: 10÷30 Vdc

IP code: **IP 65**
Pneumatic ports on both sides

* : TOLERANCE BETWEEN DOWEL HOLES ± 0.02, TO SCREW HOLES ± 0.1

Subject to technical modification without notice.